CNENGR 116
Fundamentals of Digital Electronics

Lecture 13 – Module Revision

Dr Zhongming Zhang

zhongming.zhang@lancaster.ac.uk

School of Engineering

Lancaster University

Science and Technology at Lancaster

Lancaster University College at Beijing Jiaotong University

Objectives

- Look at some typical class test questions
- Introduce binary multiplication and PLD

Conversion between different number systems

- Convert $(40)_{10}$ to binary
- Convert $(23)_{10}$ to binary
- Convert $(10101100)_2$ to decimal
- Convert $(00101001)_2$ to decimal

Binary calculations

- $10110 + 1001$
- $0.11011 + 0.0011$
- 10001×1101

Binary subtraction using 2's complement

- $10110 - 1001$

Assumptions, both are standard binary format and therefore represent positive numbers.

Period, frequency and duty cycle of a periodic waveform

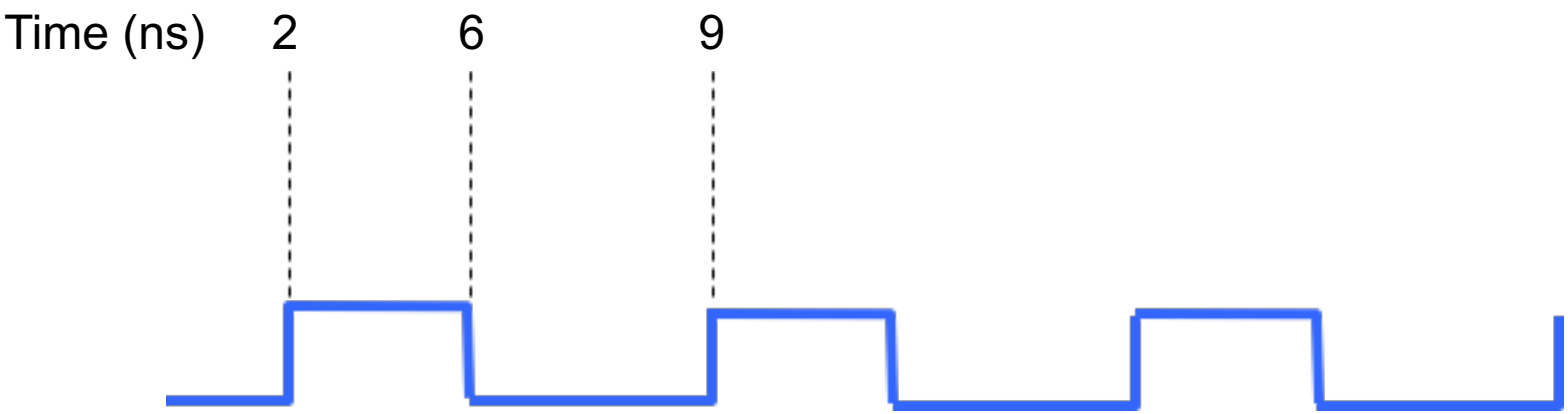

Expression simplification using Boolean algebra

- $X = (\bar{A}B(\bar{C} + \bar{B}D) + AC)B$

$$(A\bar{B}(\bar{C} + \bar{B}D) + AC)B$$

$$= A\bar{B}B(\bar{C} + \bar{B}D) + ABC$$

$$= ABC$$

Convert to standard SOP and complete truth table with binary representation

- $X = \overline{AC + BC} + BC$

$$X = \overline{AC+BC} + BC$$

$$= \overline{AC} \cdot \overline{BC} + BC$$

$$= (\bar{A}+\bar{C})(\bar{B}+\bar{C}) + BC$$

$$= \bar{A}\bar{B} + \bar{B}\bar{C} + \bar{A}\bar{C} + \bar{C} + BC$$

$$= \bar{A}\bar{B}(\bar{C}+C) + \bar{B}\bar{C}(\bar{A}+A) + \bar{A}\bar{C}(\bar{B}+B) + \bar{C}(\bar{B}+B)(\bar{A}+A) + BC(\bar{A}+A)$$

$$= \ldots\ldots$$

Karnaugh Maps to find simplified SOP expression

- $AB\bar{C}\bar{D} + A\bar{B}\bar{C}\bar{D} + ABC\bar{D} + A\bar{B}C\bar{D} + \bar{A}\bar{B}CD + \bar{A}\bar{B}C\bar{D}$

K-Map

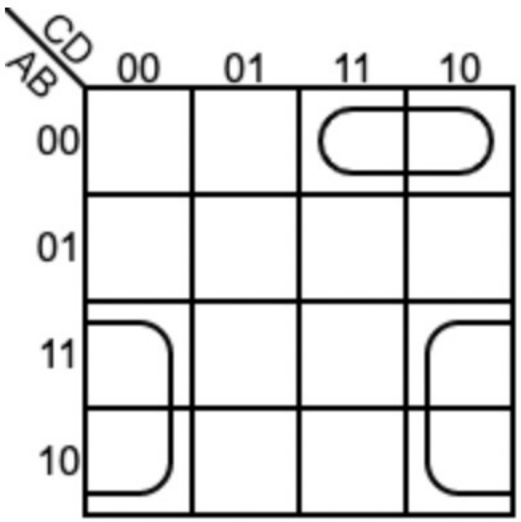

Karnaugh Maps to find simplified SOP expression

AB \ CD	00	01	11	10
00				
01	1	1	1	1
11			1	
10	1		1	1

Implementing logic circuits

- Using NAND gates only, implement $X = \overline{AB} + C\overline{D}$

$$X = \overline{AB} + C\overline{D} = \overline{\overline{\overline{AB} + C\overline{D}}} = \overline{\overline{AB} \cdot \overline{C\overline{D}}} = \overline{A \cdot B \cdot \overline{C\overline{D}}}$$

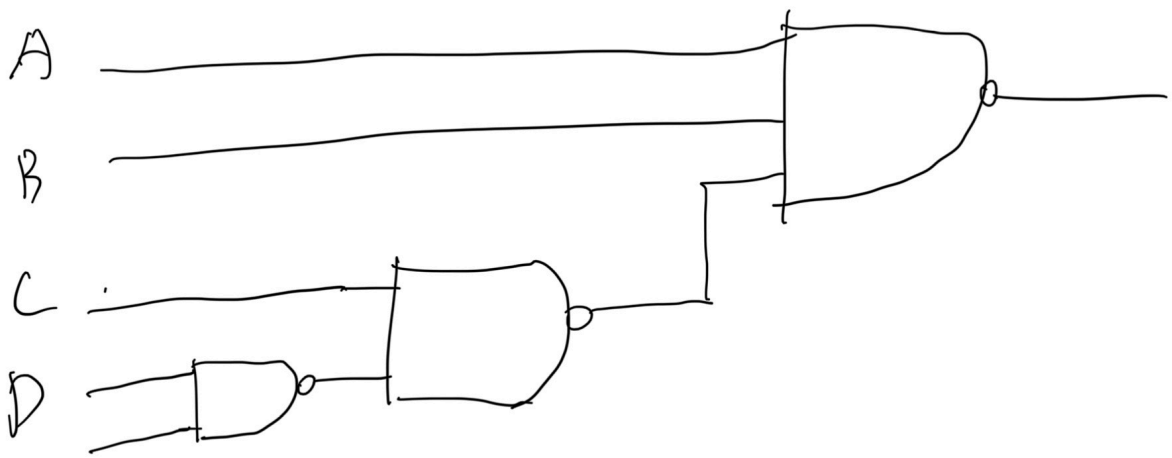

Output waveform of a latch or flip-flop

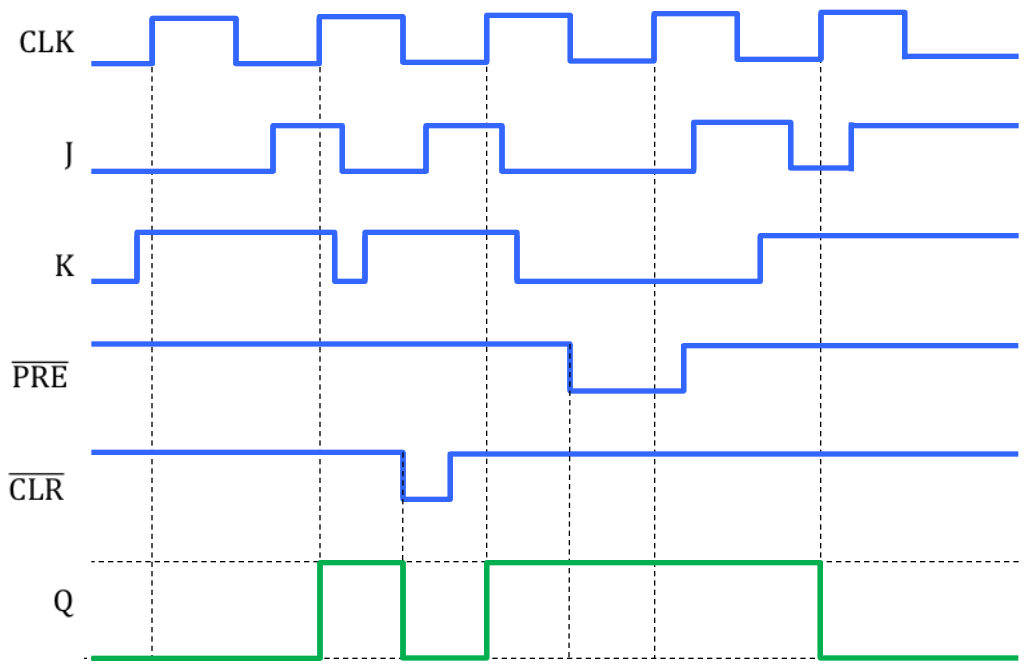

This is a positive edge-trigger JK flip-flop with $\overline{PRESET}$ and $\overline{CLEAR}$

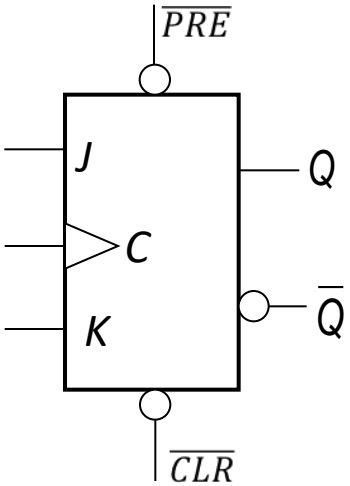

End of module

- To prepare for the class test Moodle quiz
  - Practice the tutorial questions
  - The class test Moodle quiz will be like the tutorial quizzes and some of the practical quizzes.

- To prepare for the final exam
  - Do all of the above
  - Review the lecture material
  - Study the example exam on Moodle (answers will not be given).